PROGRAMMATIC AGREEMENT AMONG THE FEDERAL EMERGENCY MANAGEMENT AGENCY, THE ILLINOIS HISTORIC PRESERVATION AGENCY, THE ILLINOIS EMERGENCY MANAGEMENT AGENCY AND THE ADVISORY COUNCIL ON HISTORIC PRESERVATION

WHEREAS, the Federal Emergency Management Agency (FEMA), which has been incorporated into the Department of Homeland Security, makes assistance available to States, communities, and other eligible entities through its programs for disaster housing, hazard mitigation, prevention of and preparedness for emergencies and disasters as well as the repair, restoration and replacement of public infrastructure (Programs) pursuant to the Robert T. Stafford Disaster Relief and Emergency Assistance Act, 42 U.S.C. §§5121-5206 (Stafford Act); the Post-Katrina Emergency Reform Act of 2006; the Homeland Security Act of 2002, as amended; the Disaster Mitigation Act of 2000, the National Flood Insurance Act of 1968, as amended, 42 U.S.C. § 4001 et seq.; the Federal Fire Prevention and Control Act of 1974, as amended, 15 U.S.C. § 2201 et seq.; and implementing regulations contained in Title 44 of the Code of Federal Regulations (CFR); and

WHEREAS, FEMA has determined that implementation of these Programs will result in Undertakings that may affect historic properties listed in or eligible for the National Register of Historic Places (National Register), and FEMA has consulted with the Illinois Historic Preservation Agency (SHPO), pursuant to 36 CFR Part 800, implementing Sections 106 and 110(f) of the National Historic Preservation Act (NHPA), as amended, 16 U.S.C. Part 470; and

WHEREAS, FEMA has determined that there are no federally-recognized Indian tribes (Tribes) in the State of Illinois; however, the implementation of these Programs may result in Undertakings that have an effect on Historic Properties that have religious and cultural significance to currently unidentified, non-resident federally-recognized Tribes, and FEMA may request that these Tribes participate as a project–specific consulting party to fulfill the requirements of Section 106; and

WHEREAS, as a result of future disasters and/or enabling legislation, the State of Illinois will receive financial and technical assistance from FEMA and will in turn provide monies and other assistance to eligible applicants through FEMA's various grant Programs, which the Illinois Emergency Management Agency (IEMA) will administer, and has, therefore, participated in the Section 106 consultation, and been invited to be an "invited signatory" (Signatory) to this Programmatic Agreement (Agreement); and

WHEREAS, FEMA has invited the Advisory Council on Historic Preservation (ACHP) to enter into formal consultation and become a Signatory to this document, and the ACHP has notified FEMA pursuant to 36 CFR § 800.6(a)(1)(iii) that it will participate in the consultation; and

WHEREAS, FEMA, SHPO, IEMA and ACHP acknowledge that implementation of these Programs will be more effective if, pursuant to 36 CFR §800.14(b), this Agreement is in place to define roles and responsibilities in the Section 106 review process, and to promote efficiency so that the effects of Undertakings on Historic Properties may be considered while minimizing delays to FEMA's and IEMA's delivery of disaster and mitigation assistance; and

NOW, THEREFORE, FEMA, SHPO, IEMA and ACHP agree that these Programs will be administered in accordance with the following Stipulations to satisfy FEMA's Section 106 responsibilities for all Undertakings. FEMA will not approve funding of any Undertaking until it is reviewed pursuant to this Agreement.

STIPULATIONS

To the extent of its legal authority, and in coordination with IEMA, FEMA shall require that the following measures are implemented:

I. LEAD AGENCY COORDINATION

A. When FEMA is determined to be the Lead Agency under 36 CFR §800.2(a)(2), and has obtained the concurrence of the other participating federal agency or agencies, FEMA will coordinate the Section 106 review activities of any such federal agencies. FEMA will also conduct any necessary consultation with Indian tribes to meet its government-to-government responsibilities.

B. If an applicant requests FEMA funding for a project with the same scope of work that was previously reviewed by another federal agency and for which the Section 106 consultation has been completed, additional Section 106 consultation will not be required by FEMA. The applicant shall certify to FEMA that the scope of the project has not changed (i.e., that the project plans bear the same date as those referenced in the previous comment letter) and the SHPO's concurrence is incorporated in timely correspondence provided to FEMA for its project records.

II. APPLICABILITY

A. This Agreement applies immediately upon date of execution and will remain in effect pursuant to Stipulation XII.

B. FEMA has determined that some types of activities have limited potential to affect Historic Properties, and FEMA has no Section 106 responsibilities, pursuant to 36 CFR §800.3(a)(1). Such activities are included under Section IX of the Programmatic Allowances (Allowances).

C. FEMA will determine when an Undertaking meets applicable criteria of the Allowances in Appendix A. FEMA will document this determination in the project file and may approve funding for the Undertaking without SHPO review. Should the SHPO object to FEMA's application of Appendix A to an Undertaking, FEMA will consult with the SHPO pursuant to the terms of this PA or request the advisory comments of the ACHP.

D. For all other activities, FEMA will conduct Section 106 review in accordance with Stipulation VIII or IX of this Agreement.

III. GENERAL

A. Professional Qualifications:

- FEMA will use federal, state, or contractor staff who meet the Secretary of the Interior's (SOI) Professional Qualifications Standards (Qualifications), as determined by FEMA's Federal Preservation Officer (FPO), for the required disciplines, in making National Register eligibility determinations and assessments of effect and in overseeing the overall compliance with this Agreement. If FEMA has delegated Section 106 review authority for making National Register eligibility determinations and assessment of effect determinations as provided in 36 CFR§ 800.2(a), FEMA will review and confirm all findings and determinations of these delegated activities before using these determinations as the basis for decision-making for projects in the three review categories described in Stipulation V, below.

- FEMA acknowledges that some individuals or groups, including Indian tribes, possess special expertise related to Traditional Cultural Properties and properties of religious and cultural significance. FEMA may utilize this expertise and consult with them for the purpose of site identification and determining if any such properties are eligible for the National Register, and may invite them to participate as consulting parties in the Section 106 process.

B. All time designations are in calendar days. If any party does not comment on a determination related to a proposed action within an agreed upon timeframe, FEMA may assume the party's concurrence with FEMA's determination.

C. FEMA responsibilities:

- FEMA will provide the SHPO with an annual report for the previous calendar year by March 31st of each year that this Agreement is in effect. This report will summarize, as listed below, the actions taken to implement the terms of this Agreement.

  a. A list of Undertakings requiring a cultural resource survey;

b. A list of properties, sites and structures treated as eligible for the National Register;

c. A summary of Section 106 mitigation measures implemented under individual Memoranda of Agreements;

d. A summary of Undertakings requiring archaeological activities;

e. A summary of FEMA staff training relating to historic preservation;

f. The views of FEMA regarding the effectiveness of the Agreement;

g. Suggestions for additional actions that could be considered for inclusion in Appendix A.

The parties will review this information to determine if amendments to the Agreement are necessary. Upon the request of any Signatory to this Agreement, a meeting or telephone conference will be held subsequent to the issuance of the annual report to review the report and/or discuss issues in greater detail.

- FEMA shall ensure consultation documentation is consistent with 36 CFR §800.11(d-g) and that all formal survey, testing, or cultural/historic assessment reports resulting from Undertakings pursuant to this Agreement will be consistent with applicable SHPO guidelines for such documents as provided in Appendix B.

- FEMA may submit Disaster Recovery and Routine Review requests to the SHPO via e-mail or by a paper copy either hand delivered or mailed to the SHPO office. In either case, the review period starts upon SHPO receipt of the review request. Emergency review requests will be submitted in the most expedient manner as determined by FEMA.

- Prior to authorizing the release of funds for individual Undertakings requiring special conditions pursuant to this Agreement, FEMA will fully inform IEMA or other grantee of all stipulations and conditions in writing to ensure that they are understood and conveyed to the sub-grantee, pursuant to stipulation III.E.1.

D. Illinois SHPO responsibilities:

- The SHPO will respond to all FEMA consultation requests, including National Register Determinations of Eligibility and Determinations of Effect, within:

  a. 3 days of receipt for Expedited Emergency Reviews

  b. 10 days of receipt for Disaster Recovery Reviews

  c. 30 days of receipt for Routine Reviews.

- The SHPO will concur with or object to FEMA's determinations. SHPO response to FEMA shall be sent electronically, followed by a paper copy. FEMA may make project decisions based on the electronic copy.

- The SHPO will provide staff needed to complete on-site emergency archaeological assessments required by Stipulations XI and XII of this Agreement.

- The SHPO may delegate some or all of its responsibilities under this Agreement to persons who are not currently members of the SHPO staff and who will serve as SHPO representatives with respect to the actions and decisions required by this Agreement. The SHPO will consult with FEMA about the selection of representatives, their professional credentials, the scope of responsibilities delegated, and implementing procedures related to the actions and decisions delegated.

E. IEMA Responsibilities:

- As grantee, IEMA, with FEMA's assistance in accordance with Stipulation III.C.4, will ensure that all sub–grantees are fully informed as to their responsibilities as stipulated in this Agreement.

- At the applicant briefings, IEMA will advise applicants that, until compliance with this Agreement is achieved and Section 106 review is concluded on Undertakings for which they are seeking federal funding, they may not initiate work that

  a. Causes disturbance of previously undisturbed ground, or

  b. Alters a structure that is fifty years old or older or is potentially eligible for the National Register of Historic Places.

- Other responsibilities include, but are not limited to:

  a. Ensuring sub–grantees understand and acknowledge any additional conditions that may be placed upon construction, repair or hazard mitigation projects as a result of Section 106 consultation or compliance with this Agreement,

  b. Ensuring sub–grantees understand that failure to comply with undertaking–specific conditions will jeopardize federal funding,

  c. Informing sub-grantees that repairs to historic structures made using materials and repair methods that match the original (in-kind repairs) generally require less time for Section 106 review, and

  d. Making sub–grantees aware of the potential of anticipatory actions to affect federal funding pursuant to Stipulation XIV of this Agreement.

IV. INITIAL COORDINATION FOLLOWING DECLARATION OF A DISASTER

Upon the presidential declaration of a disaster, FEMA will notify SHPO and IEMA of the declaration and provide a list of the designated counties. After establishing the Joint Field Office (JFO), FEMA will coordinate with the SHPO and IEMA to establish points of contact and then initiate a historic scoping process where the SHPO will be provided pertinent information from the Preliminary Damage Assessments (PDA), program issues and processes will be discussed, along with any special protocols or other considerations related to implementation of the Agreement.

IEMA and FEMA, will also present information related to the Section 106 review process to all applicants: IEMA at the applicants' briefings and FEMA at the kickoff meetings.

A. FEMA will:

1. Determine with the SHPO those previously–designated Historic Properties (buildings, structures, sites, objects and districts) within the Undertaking's area of potential effect that may not have retained integrity. This Agreement only applies to Historic Properties that retain integrity in the aftermath of the disaster, pursuant to 36 CFR Part 60. If FEMA and the SHPO do not agree on whether a National Register eligible property has retained integrity, FEMA will review all Undertakings that may affect the property in accordance with Stipulations V through X.

2. Consult with other federal agencies and local governments with Section 106 responsibilities to ensure compliance with applicable historic preservation laws and regulations.

3. Develop with the SHPO a feasible plan for involving the public in the Section 106 review process, pursuant to 36 CFR §800.2(d) and Stipulation XV below, and provide a copy of the plan to all Signatories and consulting parties.

4. Upon learning that a National Historic Landmark (NHL) has been damaged as a result of the disaster, FEMA will promptly notify the SHPO and the Secretary of the Interior's NHL Program Manager at the National Park Service's Midwest Regional Office.

B. The Illinois SHPO will:

1. Provide FEMA with available information about Historic Properties within the declared disaster area, including:

   a. Properties listed in or previously determined eligible for the National Register by the SHPO or by the SOI;

   b. Properties listed in the Illinois Inventory of Archaeological Sites and the Illinois Historic Sites Survey Inventory;

c. Geographic areas with high potential for archaeological resources, and areas where it is known that there are not any archaeological resources; and

d. Previously identified Traditional Cultural Properties, and known properties of religious and cultural significance to Tribes and /or other groups.

2. Identify SHPO staff or consultants to assist FEMA staff with its Section 106 responsibilities, and to identify, in coordination with FEMA, specific activities that the SHPO may perform at FEMA's request for specific projects.

3. Assist FEMA in identifying any Tribes, organizations, or individuals that may have an interest in Historic Properties affected by the disaster so that FEMA can contact these interested parties to inform them of this Agreement and to request information on the location of damaged Historic Properties within the area of potential effect.

4. Assist local jurisdictions in evaluating the potential effects on historic properties that may result from staging and landfill sites for debris disposal.

V. SECTION 106 REVIEW CATEGORIES

There are three Section 106 review categories established by this Agreement. The first category is "Emergency Reviews." These Undertakings require urgent response and greatly abbreviated review periods.

The second category, "Disaster Recovery Reviews," includes Undertakings funded by the Stafford Act. While they require streamlined review, they are not responses to immediate emergency or life–threatening situations.

The third category is "Standard Reviews." This category includes Undertakings intended to mitigate or prevent hazards of many kinds, which are funded under a number of grant programs authorized by the Stafford Act, the Homeland Security Act and other legislation authorized by Congress from time to time. The review of these Undertakings will be streamlined by application of the Allowances presented in Appendix A as appropriate. These Undertakings prepare and protect against potential hazards and lack the urgency of emergency responses. They will follow the normal Section 106 review process when there are potential adverse effects on Historic Properties.

VI. EMERGENCY REVIEWS

A. Immediate rescue and salvage operations conducted to preserve life and improved property are exempt from the provisions of Section 106 (36 CFR §800.12(d)).

B. As a result of or in anticipation of the disaster, but within 30 days after the time of discovery of the emergency, FEMA may be requested to authorize funding

through its response and recovery programs (Direct Federal Assistance, Public Assistance Program, Individuals and Households Program) for emergency protective measures in response to an immediate threat to human health and safety or improved property, which may adversely affect Historic Properties. For all Undertakings that the Federal Coordinating Officer (FCO) determines are of an emergency nature as defined in Section 102(1) of the Stafford Act, and are not exempt from Section 106 review in accordance with Stipulation V.A.1. above, FEMA will conduct the following expedited review:

1. The expedited review period will begin at the time FEMA determines that an emergency action is required, and will remain in effect for the time necessary to implement this expedited review, but for not more than 30 days after the declaration, unless extended.

2. The FCO will certify in writing to the SHPO the need for FEMA to conduct expedited project review for individual Undertakings. If necessary, the expedited review period may be extended by FEMA in 30-day increments upon written notification to the SHPO. FEMA will immediately assume the SHPO's concurrence unless otherwise notified.

3. If it appears that an emergency action will adversely affect a Historic Property during this expedited review period, FEMA will provide the SHPO with available information about the condition of the property, the proposed action, and prudent and feasible measures that would take the adverse effect into account, requesting the SHPO's comments. FEMA may provide this information through written requests, telephone conversations, meetings, or electronic media. The SHPO will respond to any FEMA request for comments within 3 days after receipt, unless FEMA determines the nature of the emergency action warrants a shorter time period.

C. If FEMA does not accept the recommendations provided by the SHPO pursuant to this Stipulation, or the SHPO objects to FEMA's proposal to use the emergency review procedure and/or proposed treatment measures, FEMA will consult with the SHPO to resolve the dispute. If FEMA is unable to resolve the dispute, FEMA will forward to the ACHP relevant documentation for the project, including a summary of the dispute, and request ACHP's comments in accordance with 36 CFR §800.12(b)(2). The ACHP will provide final comments to FEMA within 3 days after receipt of FEMA's request, unless FEMA determines the nature of the emergency action warrants a shorter time period.

VII. DISASTER RECOVERY REVIEWS

The Signatories of this Agreement will follow the review procedures outlined below for all non-emergency disaster recovery Undertakings funded by the Stafford Act, except as provided by the exempted activities in Stipulations II.B and the Allowances cited in Stipulation II.C.

A. Area of Potential Effects (APE): When an Undertaking is limited to the in-kind repair or rehabilitation of a standing structure's interior or exterior, the APE will be the individual facility (as defined in 44 CFR §206.201(c)). For all other Undertakings, including those that may affect archaeological properties, FEMA will establish the APE in consultation with the SHPO. FEMA may also identify and invite other appropriate parties (such as local governments and the public) to provide information related to the APE.

B. In accordance with 36 CFR §800.4(b)-(c), FEMA will determine, in consultation with the SHPO, if the APE contains properties (including archaeological properties) that are listed in or eligible for the National Register.

C. If no Historic Properties are present within the APE, or if an Undertaking is designed to avoid affecting the character–defining features of such Historic Property or properties, FEMA will make a determination of "no Historic Properties affected" in accordance with 36 CFR §800.4(d)(1). FEMA will notify the SHPO and all consulting parties of this determination and provide supporting documentation. Unless the SHPO or any consulting party objects to this determination within 10 days after receipt, FEMA will complete the Section 106 review and may approve funding.

D. If an Undertaking may affect identified Historic Properties, or if the SHPO objects to the determination of "no Historic Properties affected" within 10 days after receipt, FEMA will consult with the SHPO to apply the criteria of adverse effect, pursuant to 36 CFR §800.5(a)(1), or determine if the Undertaking meets the SOI Standards, or any other applicable SOI Standards. FEMA will consider any views provided by consulting parties and the public related to such effects.

E. If FEMA and the SHPO agree that an Undertaking does not meet the adverse effect criteria or that it meets the Standards, FEMA will make a determination of "no adverse effect" pursuant to 36 CFR §800.5(b). FEMA will notify the SHPO and all consulting parties of this determination and provide supporting documentation pursuant to 36 CFR §800.5(c). Unless the SHPO or any consulting party objects within 10 days after receipt of the notification, FEMA will complete the Section 106 review and may approve funding.

F. If the SHPO objects to the "no adverse effect" determination, FEMA will attempt to resolve the objection through further consultation. If unresolved, FEMA will work with IEMA and the sub-grantee to revise the scope of work to substantially conform to the Standards, in consultation with the SHPO and consulting parties. FEMA also will ensure that the revised scope of work is reviewed for funding eligibility. If the applicant modifies the scope of work to address the objections, FEMA will notify the SHPO and all consulting parties, and provide supporting documentation. Unless the SHPO or any consulting party objects within 10 days after receipt, FEMA will complete the Section 106 review and may approve funding.

G. If the applicant is unable to, or will not modify the Undertaking to meet the Standards or address the objections, FEMA will initiate adverse effect consultation pursuant to Stipulation VI.

H. If there is a reasonable potential for archaeological properties to be present within the APE, FEMA will consult with the SHPO to determine the level of effort necessary to identify the anticipated type and location of these properties.

I. FEMA will initiate adverse effect consultation pursuant to Stipulation IX when consulting parties agree there is an adverse effect, or when a consulting party objects to a finding of "no adverse effect" whereby identified archaeological properties are avoided or effects minimized through redesign of an Undertaking, or through other procedures or requirements.

VIII. STANDARD REVIEWS

A. As described in Stipulation II.B above, the Undertakings included under Section IX of the Allowances have no potential to impact Historic Properties, and FEMA has no further Section 106 responsibilities prior to funding these Undertakings.

B. The Allowances will apply to the review of all grant projects not excluded from review by Stipulation II.B.

C. Projects not meeting an Allowance will follow the procedures set forth in 36 CFR §800.3 through §800.7.

IX. RESOLUTION OF ADVERSE EFFECTS FOR HISTORIC PROPERTIES

A. If FEMA determines that an Undertaking will adversely affect a Historic Property, FEMA will determine if the Undertaking will be reviewed in accordance with 36 CFR §800.6(b), resulting in a Memorandum of Agreement (MOA), or addressed through a Secondary Programmatic Agreement. Following this decision, FEMA will notify the SHPO and all other consulting parties, and provide the ACHP with an adverse effect notice, including documentation in accordance with 36 CFR §800.11(e).

- Memorandum of Agreement: FEMA, in consultation with the SHPO and other consulting parties, may develop an MOA in accordance with 36 CFR 800.6(c) to outline measures to avoid, minimize or mitigate adverse effects to Historic Properties. FEMA may consider reasonable alternate treatment measures that serve an equivalent or greater public benefit than standard treatments or archaeological data recovery, while promoting the preservation of Historic Properties. FEMA will attempt to identify all such feasible measures in consultation with the SHPO and other consulting parties. Alternate measures may include, but are not limited to, preservation planning, acquisition of preservation easements by appropriate non-governmental organizations, interpretive programs, and development or

improvement of a Historic Properties database with Geographic Information Systems.

- Secondary Programmatic Agreement: FEMA, SHPO, IEMA, the ACHP (if participating), and other consulting parties may consult to develop a Secondary Agreement to require programmatic conditions and/or treatment measures for multiple, but similar Undertakings by an applicant.

B. When an Undertaking will adversely affect an archaeological property, and barring objections from Indian Tribes that have expressed an interest in the site because of its religious or cultural significance, and barring the existence of human remains or associated funerary objects within the site, FEMA may resolve the adverse effect by providing for the recovery of significant information through archaeological data recovery or other scientific means, once avoidance and adverse affect minimization provisions in Stipulation IX have been exhausted.

- To accomplish this objective, FEMA will follow the SOI's Guidelines for Archaeological Documentation, as well as the SHPO's data recovery and documentation guidelines as outlined in Appendix B; and consult with the other consulting parties to prepare a data recovery plan, including material and record curation provisions.

- For sites where FEMA determines extraordinary circumstances exist or when other treatment measures are appropriate, FEMA will consult further with the other consulting parties to develop an appropriate approach to resolving the adverse effects.

C. FEMA will also involve the public in the resolution of adverse effects in accordance with 36 CFR §800.6(a)(4) and following the public participation plan as developed in Stipulation IV.A.3.

D. When an Undertaking will adversely affect an NHL, FEMA will notify and invite the ACHP to participate in consultation pursuant to 36 CFR §800.6(a)(1)(i)(B); and also will notify and invite the Secretary of the Interior (Secretary), through the NHL Program Manager at the National Park Service's Midwest Regional Office, to participate in consultation, pursuant to 36 CFR §800.10(c). When the ACHP participates in consultation related to an NHL, the ACHP will report the outcome of the consultation to the Secretary and the FEMA Administrator.

X. CHANGES TO AN APPROVED SCOPE OF WORK

Based on information provided by the sub-grantee, IEMA will notify FEMA as soon as practicable of any proposed change to the approved scope of work for an Undertaking related to a Historic Property.

I. If FEMA determines the change meets an Allowance or has no effect on the property, FEMA will approve the change.

II. If the change can be modified to meet an Allowance or conform to any applicable SOI Standards, FEMA may authorize the applicant to proceed accordingly and approve the project.

III. If FEMA determines that the change does not meet an Allowance, or if FEMA and the SHPO determine that the change cannot be modified to conform to any applicable SOI Standards, FEMA will initiate adverse effect consultation pursuant to Stipulation VI. Standard 30–day response times apply to changes to an approved scope of work.

XI. WOODY DEBRIS REMOVAL FROM CEMETERIES, BURIAL GROUNDS AND HISTORIC LANDSCAPES/SITES

A. Historically and archeologically sensitive areas within cemeteries, burial grounds, and historic landscapes/sites will be identified and cordoned off to receive special attention during the removal of woody debris by the applicant. The rootballs of fallen trees should be inspected by a bio-archaeologist for human remains and archaeological materials provided by the SHPO. Rootballs with human remains and/or historic materials should be left in place until an assessment can be made by the archaeologist. When possible, it is preferable to trim rootball roots and place rootballs back into their original holes. Consultation with the SHPO will take place to assure that heavy machinery and other vehicles remain on service roads and that staging areas will not be established on sensitive areas. Delicate work will be done by hand and holes left from necessary rootball extraction should be filled with soil, with grass seed planted for erosion control, if appropriate.

B. The re-interment of human remains, exposed caskets, and funeral items within an existing cemetery by a funeral director or coroner immediately after a Presidential disaster declaration will not require Section 106 review by FEMA or the SHPO, but must be done in accordance with all applicable codes, laws, and statutes, in particular the Illinois Human Skeletal Remains Protection Act.

C. Woody debris removal affecting Native American burial grounds, including prehistoric mounds, cemeteries, and isolated graves will be examined by a bio-archaeologist provided by the SHPO. If human skeletal remains are partially disturbed, they should be re-interred with the rest of the undisturbed bones. If the remains are completely disturbed, the recovery and disposition of the remains will be completed in accordance with the Illinois Human Skeletal Remains Protection Act.

XII. UNANTICIPATED DISCOVERIES

A. Based on information provided by the sub-grantee, IEMA will notify FEMA as soon as practicable if it appears that an Undertaking will affect a previously

unidentified property that may be historic, including human remains; or affect a known Historic Property in an unanticipated manner. IEMA will notify the applicant that unless they stop construction activities in the vicinity of the discovery and take all reasonable measures to avoid or minimize harm to the property, federal funding may be jeopardized. Construction activities may not resume until FEMA concludes consultation with the SHPO and other affected consulting parties. In the case of human remains, FEMA will ensure that the provisions of the Illinois Human Skeletal Remains Protection Act will be implemented and satisfied.

B. FEMA will notify the SHPO and other affected consulting parties of the discovery at the earliest possible time and consult to develop actions to take into account the effects of the Undertaking. FEMA will notify the SHPO and other affected consulting parties of any time constraints, and all parties will mutually agree upon timeframes for this consultation. IEMA and the applicant may participate in this consultation. FEMA will provide the SHPO and other affected consulting parties with written recommendations to take into account the effects of the Undertaking. The SHPO will respond to FEMA and IEMA concerning the written recommendations within 15 days of their receipt.

C. If the SHPO or any other consulting party does not object to FEMA's recommendations within the agreed upon timeframe, FEMA will require the applicant to modify the scope of work to implement the recommendations. If the SHPO objects to the recommendations, FEMA and the SHPO will consult further to resolve this objection through actions including, but not limited to, identifying project alternatives that may result in the Undertaking having no adverse effect on Historic Properties, or proceeding in accordance with Stipulation IX.

XIII. DISPUTE RESOLUTION

A. Should any Signatory object within the timeframes provided to any plans, specifications, or actions provided for review pursuant to this Agreement, FEMA shall consult further with the objecting party to seek resolution by the most expeditious and appropriate method.

B. If FEMA determines that the objection of a Signatory cannot be resolved, FEMA shall forward all documentation relevant to the dispute to the ACHP, including FEMA's proposed resolution of the dispute. Within 15 days after receipt of all pertinent documentation, the ACHP shall:

- Advise FEMA that it concurs with FEMA's resolution of the dispute; or
- Provide FEMA with recommendations, which FEMA shall take into account in reaching a final decision regarding the dispute; or

- Notify FEMA that it shall comment pursuant to 36 CFR §800.7(c), and proceed to comment. Any comment provided shall be taken into account by FEMA in accordance with 36 CFR §800.7(c)(4).

C. If the ACHP does not provide FEMA with comments or recommendations within 15 days, FEMA may assume that the ACHP does not object to its recommended approach and it shall proceed accordingly.

D. Any recommendation or comment provided by ACHP shall be understood to pertain only to the subject of the dispute, and FEMA's responsibility to fulfill all actions that are not subject to the dispute shall remain unchanged.

E. The Applicant will not be required to cease work on activities unrelated to the objection while the objection is being reviewed and resolved.

F. Upon resolution of the dispute, FEMA shall notify the SHPO, ACHP, IEMA, identified consulting parties and any members of the public who raised the objection within 15 days following the resolution.

G. If at any time during implementation of the measures stipulated in this Agreement, should an objection relevant to the implementation of this Agreement be raised by a member of the public, FEMA shall take the objection into account, notify the Signatories and any other appropriate consulting parties of the objection, and consult as needed with the objecting party, the Signatories and consulting parties in order to resolve the objection.

XIV. ANTICIPATORY ACTIONS

A. Pursuant to Section 110(k) of the NHPA, FEMA will not grant assistance to an applicant who, with intent to avoid the requirements of this Agreement or Section 106, has intentionally, significantly, adversely affected a Historic Property to which the assistance would relate, or having legal power to prevent it, allowed such significant adverse effect to occur. If mitigating measures are determined by FEMA, and after consulting with ACHP, FEMA may determine that circumstances justify granting such assistance despite the adverse effect created or permitted by the applicant, and will complete consultation for the Undertaking pursuant to Stipulation IX.

B. IEMA will advise its applicants of Stipulation XIV.A in accordance with Stipulation III.E above.

XV. PUBLIC PARTICIPATION

A. FEMA recognizes that the views of the public are essential to informed decision making in the Section 106 review process. FEMA will consult with the SHPO to determine if there are individuals or organizations with a demonstrated interest in the preservation of historic resources that should be made aware of an Undertaking. If such parties are identified, FEMA will provide them with

information regarding the Undertaking and its effect on historic properties, consistent with the confidentiality provisions of 36 CFR §800.II(c). When FEMA has determined that an Undertaking will have an adverse effect upon historic properties, FEMA will provide the public an opportunity to express their views on resolving the adverse effect.

B. FEMA will notify the public of proposed actions in a manner that reflects the

- Nature and complexity of the Undertaking and FEMA's specific involvement,
- Effect of the Undertaking on historic properties,
- Likely interest of the public in the effects on historic properties and
- Confidentiality concerns of the consulting parties, private individuals and businesses.

C. In accordance with the plan developed in consultation with the SHPO for involving the public, and taking into consideration the variables in XV.B., FEMA will identify the appropriate stage of project review for seeking public input during the Section 106 process. These stages may include:

1. Initial coordination for complex Undertakings,
2. Identification of historic properties,
3. Assessment of adverse effects and
4. Resolution of adverse effects.

D. FEMA will consider all views provided by the public regarding a proposed Undertaking, and will consider all written requests of individuals and organizations to participate as consulting parties, and in consultation with the SHPO, IEMA, and ACHP, if participating, determine which should be consulting parties. FEMA will invite the local government with jurisdiction over the area of the proposed Undertaking, the applicant for FEMA assistance for the proposed Undertaking, and any individual or organization that will assume a specific role or responsibility outlined in a MOA or Secondary Agreement to participate as a consulting party.

E. FEMA also may provide public notices and the opportunity for public comment or participation in an Undertaking through the public participation process of the National Environmental Policy Act (NEPA) and its implementing regulations set out at 44 CFR Part 10; as well as Executive Orders 11988 and 11990 relating to floodplains and wetlands as set out in 44 CFR Part 9, and Executive Order 12898 relating to Environmental Justice.

F. At any time during the implementation of the measures stipulated in this Agreement should a member of the public raise an objection to any measure within the Agreement or its manner of implementation, FEMA will take the objection into account and consult as needed with the objecting party, the SHPO, IEMA, and the ACHP, if participating, to address the objection.

XVI. DURATION, AMENDMENTS, AND TERMINATION

A. Unless terminated pursuant to Stipulation XVI.D below, this Agreement shall remain in effect from the date of execution, which is the date of the last Signatory, for five (5) years or until FEMA, in consultation with all other Signatories, determines that the terms of this Agreement have been satisfactorily fulfilled and/or the Agreement should be extended.

B. In the event that this Agreement expires during a declared disaster, FEMA shall notify the Signatories that the Agreement will remain in effect for that specific disaster so long as the disaster remains open for funding.

C. If any Signatory to the Agreement determines that the Agreement cannot be fulfilled, the Signatories will consult to seek amendment of the Agreement.

D. This agreement may be terminated as follows:

- FEMA, the SHPO, or IEMA may terminate this Agreement by providing 30 days' written notice to the other parties, provided that the parties will consult during this period to seek amendments or other actions that would prevent termination. Termination of this Agreement will require compliance with 36 CFR Part 800 on all individual Undertakings, even if the disaster was originally declared while this Agreement was in effect.

- This Agreement may be terminated by the implementation of a subsequent Agreement that explicitly terminates or supersedes this Agreement, or by FEMA's implementation of Alternate Procedures, pursuant to 36 CFR §800.14(a).

E. FEMA, SHPO and IEMA may, by mutual agreement, extend this Agreement, provided that FEMA notifies the ACHP and provides them a 15-day opportunity to comment.

XVII. IMPLEMENTATION OF THIS PROGRAMMATIC AGREEMENT

A. This Agreement may be implemented in counterparts, with a separate page for each Signatory, and FEMA will ensure that each party is provided with a complete copy. This Agreement will become effective on the date of the last signature.

B. FEMA programs authorized by Congress after execution of this PA may be included under this Agreement, without amending this Agreement, through written concurrence by FEMA, SHPO, IEMA and any other consulting parties.

C. Execution of this Agreement by all Signatories and implementation of its terms by FEMA evidences that FEMA has taken into account the effects of all referenced programs on Historic Properties, and has afforded the ACHP a reasonable opportunity to comment.

FEDERAL EMERGENCY MANAGEMENT AGENCY

By: Janet M. Odeshoo Date: May 2, 2011

Janet M. Odeshoo
Deputy Regional Administrator, Region V

STATE HISTORIC PRESERVATION OFFICE, ILLINOIS HISTORIC PRESERVATION AGENCY

By: Jan Grimes Date: 2-15-11

Jan Grimes
State Historic Preservation Officer

ILLINOIS EMERGENCY MANAGEMENT AGENCY

By: _____ Date: 3/7/11

Jonathon E. Monken
Director, Illinois Emergency Management Agency

ADVISORY COUNCIL ON HISTORIC PRESERVATION

By: John M. Fowler Date: 5/13/11

John M. Fowler
Executive Director

APPENDIX A
PROGRAMMATIC ALLOWANCES

Updated per attached letter of agreement between SHPO and FEMA, June 27, 2014.

The following project activities will not require review by the Illinois SHPO. All FEMA assisted Undertakings that have a potential to affect Historic Properties will be reviewed by FEMA Historic Preservation Specialists in accordance with these Programmatic Allowances. FEMA is not required to determine the National Register eligibility of properties when the scope of work is consistent with these Allowances. These Allowances may be revised with a letter of concurrence between FEMA and the Illinois SHPO.

When used in the Allowances with reference to Historic Properties, "in-kind" shall mean that to the extent practicable, the repair or replacement will match all physical and visual aspects of existing historic materials, including form, color, and workmanship. "In-kind" mortar will also match the strength, composition, color, and joint tooling of existing historic mortar. When used with reference to non-Historic Properties, "in-kind" shall mean returning the property to its approximate pre–disaster condition or appearance on approximately the same footprint.

I. **GROUND DISTURBING ACTIVITIES AND SITE WORK**, when all work is performed in previously disturbed or archaeologically surveyed areas.

A. Ground disturbing activities related to the repair, replacement, or hardening of any footings, foundations, retaining walls, levees, other slope stabilization systems (i.e., gabion baskets, etc.), and utilities (including sewer, water, storm drains, electrical, gas, communication, leach lines, and septic tanks), provided the excavation will not disturb more soil than previously disturbed. This Allowance primarily refers to archaeological review but also applies to review of such historic features if the work is in-kind.

B. Substantially in-kind repair, replacement, or upgrade of metal or plastic culvert systems within rivers, streams, or drainage ways, including any modest increase in capacity (up to one size, i.e., not more than 12 inches) provided the excavation would not disturb more soil than previously disturbed. This Allowance also applies to related historic wood, stone or brick features (such as headwalls and wing walls) if the work is in-kind.

C. Repair, replacement, or hardening of utilities under existing improved roads/roadways, or within other previously disturbed rights of way.

D. Directional boring under streams to repair or replace damaged utility lines, provided the ground disturbance at each bore hole does not disturb an area greater than approximately 10' by 10', and is in line with the original utility trench.

E. In-kind repair or replacement of driveways, parking lots, and walkways.

F. In-kind repair or replacement of fencing, gates, and other freestanding exterior walls.

G. Substantially in-kind repair or replacement of metal utilitarian structures (i.e. pump houses, flag poles, bleachers, dugouts, concession stands, etc.), including major exposed pipelines. Modern materials may be used, provided their finish is compatible with the context of the site. Structures such as bridges, water towers, and antenna towers are not considered metal utilitarian structures for the purposes of this Allowance.

H. Installation of temporary structures for uses such as classrooms, offices, or medical support facilities, except when located in historic districts or archaeologically sensitive areas.

I. Installation of security lighting, cameras, fencing, gates, scaffolding, temporary barriers, polyethylene sheeting, or tarps, provided such work does not result in additional damage, significant loss of historic fabric, or irreversible alterations.

J. In-kind repair or replacement of hardscaping and utilities, such as paving, planters, trellises, irrigation, and lighting.

K. In-kind repair, replacement, or upgrade to codes and standards of existing piers, docks, boat ramps, boardwalks, dune crossovers, stands, and gazebos, provided the footprint will substantially match the existing footprint.

L. Debris collection from public rights of way, transport, and disposal in existing licensed solid waste facilities. This Allowance does not include establishment or expansion of debris staging areas.

M. Sediment removal from man-made drainage facilities, including retention/detention basins, ponds, ditches, and canals, to restore the facility to its pre-disaster condition. The sediment may be used to repair eroded banks or may be disposed at an existing licensed or permitted spoil site.

N. Dewatering flooded developed areas.

O. Placement of emergency beach berms seaward of improved property where severe erosion has occurred, when work is performed under the authority of an existing US Army Corps of Engineers and/or Illinois Department of Environmental Protection permit for both the sand deposit area and upland or offshore borrow site, including dredge spoil piles.

P. Installation of bollards in urban settings in front of non-historic structures. This allowance does not apply to installations within historic districts.

Q. In-kind repair or replacement of materials used to pave or surface trails in parks, campgrounds or similar areas.

R. Removal of trees by cutting the stump flush with the ground. If the disaster incident has damaged or uprooted trees such that the root ball is exposed, causing an immediate hazard and making it impossible to cut flush with the ground, the stump may be pulled and the resulting hole filled. Note: trees located in cemeteries, burial grounds, previously recorded archaeological sites and historic landscapes are not covered by this allowance and must be treated as stipulated in section XI of the agreement.

II. BUILDINGS.

In general, repair of an existing deteriorated or damaged historic feature will be considered before replacing the feature.

A. Interior Floors, Walls, Stairs and Ceilings

1. In-kind repairing, replacing, retaining, preserving, protecting, or maintaining of materials or features.
2. In-kind repair of interior floors, walls, woodwork, and ceilings. This Allowance also applies to the repair of interior finishes, provided the repair is restricted to the damaged area and does not affect adjacent materials. The Allowance does not apply to historic architectural finishes such as decorative plaster trim, or plaster substrates for decorative materials such as murals, gold leaf, etc.
3. Replacement of heavily damaged plaster and lath with drywall where the plaster is not a character–defining detail. The decision to replace or repair shall be made on a room-by-room basis.
4. Repair or replacement of suspended or glued ceiling tiles.
5. Installation of grab bars and other such minor interior modifications required for handicapped accessibility, provided that the installation is not located on historic architectural finishes such as decorative plaster trim, or plaster substrates for decorative materials such as murals, gold leaf, etc..
6. Non-destructive or concealed testing for hazardous materials (lead paint, asbestos, etc.) or damage assessment.

B. Utilities and Mechanicals

1. Minor mechanical (e.g., HVAC), electrical, or plumbing work, limited to upgrading, elevation, or in-kind replacement, with the exception of historic fixtures, which must be repaired in-kind for this Allowance to apply. This Allowance does not apply to exposed new ductwork.
2. Replacement or installation of fire detection, fire suppression, or security alarm systems. This Allowance does not apply to exposed wiring such as surface mounted wiring, conduits, piping, etc.
3. Replacement of damaged plumbing and mechanical fixtures, such as toilets, sinks and stoves.

C. Windows and Doors

1. In-kind repair or replacement of damaged or deteriorated windows, shutters, and doors.
2. Replacement of window panes in-kind or with clear double or triple glazing, provided the result does not alter the existing window material, form, and muntin profile. Also, historic windows or glazing may be treated with clear window films. This Allowance does not apply to the replacement of existing archaic or decorative glass. This Allowance does not apply to the installation of low-e glass or tinted film.
3. In-kind repair or replacement of historic door and window hardware.

D. Exterior Walls, Cornices, Porches and Foundations

1. Refinishing or repainting of surfaces, provided that destructive surface preparation treatments are not used, such as high pressure water blasting, sandblasting, power sanding, or chemical cleaning.
2. In-kind repair or replacement of carports, porches, cornices, exterior siding, doors, balustrades, stairs, or trim.
3. Substantially in-kind repair or replacement of signs or awnings.
4. Temporary stabilization, bracing or shoring, provided such work does not result in additional damage, significant loss of historic fabric, or irreversible alterations.
5. Anchoring of walls to floor systems, provided the anchors are embedded and concealed from exterior view, such as in the Hilti systems, and disturbed historic fabric is restored in-kind.
6. In-kind repair or reconstruction of concrete/masonry walls, parapets, chimneys, or cornices, including mortar that matches the color, composition, strength, and joint tooling of historic mortar, where occurring.
7. Bracing and reinforcing of chimneys and fireplaces, provided the bracing and reinforcing are either concealed from exterior view or are removable in the future.
8. Strengthening of foundations and the addition of foundation bolts, provided that visible new work is in-kind, including mortar that matches the color, strength, composition, and joint tooling of historic mortar, where occurring.

E. Roofing

1. In-kind repair, replacement, or strengthening of roofing, gutters, fascia, soffits, or downspouts.
2. Replacement of three-tab asphalt shingles with dimensioned architectural shingles; replacement of cement asbestos shingles with asphalt or other shingles of similar appearance to the originals; and replacement of untreated wood shingles with fire resistant wood shingles.

3. Repairs to a flat roof, including changes in roofing materials, when the repairs are not highly visible from ground level.
4. Replacement of inappropriate roof materials with materials that are more historically appropriate.

F. Weatherproofing and Insulation

1. Caulking and weather-stripping that complements the color of adjacent surfaces.
2. In-kind replacement or installation of insulation systems, provided historic materials such as decorative interior plaster, woodwork, or exterior siding are not altered. This Allowance does not apply to urea formaldehyde foam insulation or any other thermal insulation containing water, when installed within wall cavities. Also, the Allowance does not apply to insulation systems that do not include an adequate vapor retarder, or to work in enclosed spaces that are not vented.

G. Seismic Upgrades

The installation of the following seismic upgrades, provided that such upgrades are not visible on the exterior or within character–defining historic interiors: cross bracing on pier and post foundations; metal fasteners; collar ties; gussets; tie downs; strapping and anchoring of mechanical, electrical and plumbing equipment; concealed anchoring of furniture; installation of plywood diaphragms beneath first floor joists, above top floor ceiling rafters, and on roofs; and automatic gas shut off valves.

III. ROADS AND ROADWAYS

A. Repair of roads to pre-disaster geometric design standards and conditions using in-kind materials, number and width of lanes, shoulders, medians, curvature, grades, clearances, and side slopes.

B. Repair of road composition with in-kind surface materials to maintain pre-disaster size, traffic capacity, and load classifications of motor vehicles, including the reshaping and compacting of road bed soil and the repair of asphaltic or Portland cement concrete pavements.

C. Repair of traffic control devices such as traffic signs and signals, delineators, pavement markings, traffic surveillance systems, and rail road crossing gates and/or lights.

D. In-kind repair of road lighting systems.

E. In-kind repair of road appurtenances such as curbs, culverts, berms, fences, and sidewalks.

F. In-kind repair of roadway safety elements such as barriers, guardrails, and impact-attenuation devices.

IV. BRIDGES

A. In-kind repairs of bridges, including decks, side rails, piers, abutments, head or wing walls, to pre-disaster conditions at their original locations provided damaged historic materials are repaired or replaced in kind, and where no new construction is proposed or where the footprint will substantially match the existing footprint.

B. In kind repairs of abutments, wing walls, piers, abutments, decks, and fenders, where no new construction is proposed or where the footprint will substantially match the existing footprint.

C. Repair or replacement of previously replaced decks.

V. UTILITIES

A. In residential or urban settings, replacement or relocation of existing utility poles between the edge of a sidewalk and road.

B. In rural settings, replacement of poles located in substantially disturbed road shoulders.

C. In off-road alignments, relocations of poles in existing holes or within substantially disturbed areas within 5 ft of damaged poles.

D. The addition of 1-4 new poles per mile in existing utility corridors in substantially disturbed areas if the impacted area is 8 miles or less in length.

E. Repair or replacement of damaged equipment, such as generators, switch boards, etc.

F. Replacement of damaged materials used in composting or sewerage treatment.

VI. AIRPORTS

A. Repair of existing runways, taxiways, roadways, aprons and other hard surface facilities.

B. In kind repair of safety components, including beacons, on airport property.

C. In kind repair of existing beacons or other navigation aids not on airport property.

VII. RAILROADS

A. In kind repair or replacement of railroad safety components.

B. Repair of railroad crossings to pre–disaster conditions.

C. In kind replacement of existing bolt–connected railroad tracks and wood ties.

D. Repair of passenger loading areas to pre–disaster conditions using in–kind materials and workmanship.

VIII. FEES, SERVICES, TRAINING, AND EQUIPMENT

A. Training, technical assistance, general administrative actions, conferences, workshops, miscellaneous labor costs.

B. Rental or purchase of vehicles or other motorized equipment, hand-held portable equipment, navigation or communication equipment for vehicles and boats.

C. Builders fees.

D. Fees for architectural, engineering or other design services, provided the services will not result in an adverse effect on a property listed in or eligible for the National Register.

E. Reimbursement of an Applicant's insurance deductible, not to exceed $1,000.

F. Installation of security measures on mobile units (buses, train cars, ferries, etc.) as long as these mobile units are less than 50 years old.

G. Communication, security and surveillance equipment, including antennae, when utilizing existing infrastructure for electrical distribution systems and equipment placement; with no disturbance of previously undisturbed ground, and when installed on structures less than 50 years old.

H. Repair or replacement of building contents including furniture, movable partitions, computers, cabinetry, supplies, and equipment and any other moveable items which are not character defining features of a historic property.

IX. HUMAN SERVICES

The following undertakings relating to implementation of Sections 408, 412, 415, and 416 of the Stafford Act, 42 U.S.C. §§ 5174, 5178, 5179, 5182, and 5183 have been determined by FEMA to have no i potential to affect historic properties and therefore are exempted from further Section 106 review.

A. Implementation of Federal assistance to individuals and households pursuant to Section 408 of the Stafford Act, 42 U.S.C. §§ 5174 and 5178, Individual and Households Programs, including limited funding for minor home repairs/cleaning, content replacement, transportation, health care expenses, with the exception of construction and ground disturbing activities associated with temporary, replacement and permanent housing [44 CFR §206.117(b)(1), §206.117(b)(3), §206.117(b)(4)].

B. Disaster unemployment assistance.

C. Legal services.

D. Crisis counseling.

E. Loans to individuals, businesses, and farmers for the repair, rehabilitation, or replacement of damaged real and personal property.

F. The Cora Brown Fund, to assist victims of natural disasters for those disaster-related needs that are not met by government agencies or private organizations.

G. Food Coupons and Distribution.

X. VECTOR CONTROL

Application of pesticides to reduce adverse public health effects, including aerial and truck mounted spraying.

XI. ACQUISITIONS

Funding the administrative action of acquiring properties, including the real estate transaction, but excluding any alteration or demolition.

CHANGE LOG

Section	Change	Proposed	Date	Concur	Date	Issued
I.	Added two allowances for bollards and paving materials in parks.	FEMA	4/3/12	SHPO	7/6/12	7/10/12
II.B	Added allowance for replacement of plumbing and mechanical fixtures	FEMA	4/3/12	SHPO	7/6/12	7/10/12
V.	Added replacement of damaged materials for composting or sewerage treatment	FEMA	4/3/12	SHPO	7/6/12	7/10/12
VIII.	Added communication equipment and antennae to allowance G.	FEMA	4/3/12	SHPO	7/6/12	7/10/12
II.	Converted bullets to numbers.	FEMA	3/14/14	SHPO	6/27/2014	7/14/14
IV.A	Combine allowance III.G with allowance IV.A	FEMA	3/14/14	SHPO	6/27/2014	7/14/14
VIII.H	New allowance for building contents.	FEMA	3/14/14	SHPO	6/27/2014	7/14/14
I.R	Added allowance for flush-cutting tree stumps.	FEMA	3/14/14	SHPO	6/27/2014	7/14/14

U.S. Department of Homeland Security
Federal Emergency Management Agency
536 S. Clark St., 6th Floor
Chicago, Illinois 60605-1521

FEMA

RECEIVED
MAR 14 2014
PRESERVATION SERVICES

March 14, 2014

IHPA REVIEW
H/A
AC
AR
File

Anne E. Haaker
Deputy State Historic Preservation Officer
Illinois Historic Preservation Agency
1 Old State Capitol Plaza
Springfield, IL 627016

Re: Annual Report to the Illinois SHPO

Dear Ms. Haaker:

Paragraph III.C of the Programmatic Agreement (PA) among FEMA, the Illinois State Historic Preservation Office (SHPO), the Illinois Emergency Management Agency (IEMA) and the Advisory Council for Historic Preservation (ACHP), FEMA is required to provide the SHPO with an annual written report of activities conducted during each calendar year. Enclosed, find a copy of the report for projects approved in 2013, which includes suggestions for some minor edits to the allowances and the addition of two new allowances.

Any signatory to the PA may call a meeting of the signatories to review the report and/or discuss any issues. For that reason, I am copying Jonathon E. Monken, Director at IEMA, and Reid Nelson, Director, Office of Agency Programs at the ACHP.

If you have any questions after reviewing this report or have suggestions for additional allowances, feel free to contact me at 312-408-5438 or nicholas.mueller@fema.dhs.gov. If you are in agreement with the proposed changes to the allowances, you may use the response form provided here.

Sincerely,

Nicholas Mueller
Regional Environmental Officer
FEMA Region V

Enclosures

cc: Jonathon E. Monken, Director, Illinois Emergency Management Agency
Reid Nelson, Director, Office of Agency Programs, Advisory Council for Historic Preservation

++++++++*You may fax this page to 312-408-5551, attn: Nic Mueller*++++++++

Re: Annual Report to the Illinois SHPO

☒ As provided for by the first paragraph of Appendix A of the Programmatic Agreement among FEMA, SHPO, IEMA and ACHP, the Illinois State Historic Preservation Office ***concurs*** with FEMA's proposed changes to the programmatic allowances set forth in the 2013 Annual Report.

Anne E. Haaker
Deputy State Historic Preservation Officer

June 27, 2014
Date

APPENDIX B
ILLINOIS HISTORIC PRESERVATION AGENCY ARCHAEOLOGICAL GUIDELINES

As directed in stipulation III.D.2, and stipulation VI.B, the following guidelines will be followed by FEMA for formal survey, testing, data recovery or cultural/historic assessment reports resulting from Undertakings pursuant to this Agreement. These guidelines may be revised with a letter of concurrence between FEMA and the Illinois Historic Preservation Agency.

The following is a transcription of guidelines issued by the Illinois Historic Preservation Agency (IHPA) for archaeological contractors. The subsequent memorandum issued 12/18/96 is an important addendum.

Survey (Phase I)

The initial archaeological reconnaissance survey involves both literature search and the actual field examination of the project area to determine if there is any evidence of prehistoric or historic occupations or activities. This survey need only cover those areas which were specified in the survey request from the SHPO but 100 percent of these areas must be examined. If possible, in the case of small areas, the survey should include any minor testing which is necessary to evaluate the site for National Register eligibility. All such work should be carried out in accordance with the Secretary of Interior's Standard Guidelines (1983) for identification. Archaeological surveys can be time-consuming and you should try to build several months of lead time into your planning schedules. Surveys are best done in the spring or fall when vegetation cover is reduced.

Survey Procedures

The purpose of such surveys is to determine if cultural remains are present. Since such remains are often buried beneath the present ground surface archaeologists have developed three main techniques to assist in their detection. These techniques involve pedestrian survey in association with plowing and discing, systematic shovel testing, and deep coring or backhoe trenching for deeply buried sites.

A. **Pedestrian survey of plowed and disced areas**. Where feasible, the plowing, discing, and subsequent pedestrian survey of project areas is the most archaeologically thorough and cost effective technique presently available. To maximize this method's usefulness multiple controlled surface collections are necessary, therefore, this process does require sufficient lead-time to be implemented. However, this technique can only be utilized in areas which have been previously plowed. Pedestrian survey can also be employed in areas with good surface visibility that have not been recently plowed. Visibility must equal 25 percent or greater of the ground surface area to use pedestrian survey techniques. The suggested interval is 5 meters.

B. **Systematic shovel testing**. Systematic shovel testing on a maximum 15m grid interval is less thorough than plowing but often must be resorted to in areas which have not been previously disturbed, or where forested conditions, topographic features, or structures prohibit plowing. Such shovel testing involves the excavation of holes about 40 x 40 cm across down to archaeologically sterile soil (usually the B horizon). The fill from each shovel unit should be screened. Where cultural materials are encountered the grid interval should close up to 5 meters to more accurately delineate site boundaries.

C. **Deep testing**. When dealing with areas that potentially contain deeply buried cultural remains it will be necessary to utilize techniques that can investigate deep strata. Usually such techniques include hand or mechanical systematic deep coring, or deep trenches or block excavations dug either by hand or using heavy equipment (typically a backhoe). Examples of geomorphic features requiring such testing are floodplains, alluvial fans, and occasionally some uplands and terraces where post-Pleistocene loess deposition has occurred.

D. **Other testing procedures**. Variations of survey/testing procedures should be thoroughly explained and justified in the report. If there is a question concerning the appropriateness of such survey/testing methods the contracting archeologist should check with the SHPO.

Survey Report

At the completion of the field survey a report of the archaeological findings and recommendations must be sent to the SHPO Archaeology Section for evaluation. This report will be in keeping with the Secretary of the Interior Standards and Guidelines (1983) for archaeological documentation. To assist in this evaluation and to avoid delays in processing, the report should contain a discussion of the following minimal topics:

A. Background Information

1. Full description of project.

2. Previous archaeological research based on site files, and contact with archaeologists working in area. Thorough examination of historical documents to ascertain presence and extent of historical occupation/land use of project area is necessary. This should include, at a minimum, copies of relevant plat maps, and atlases which document historic habitation with a discussion of length of occupation and use.

3. Delineation of important regional research questions based on cultural history and past investigations.

4. Thorough discussion and description of present and past environment and their implications for interpreting the local archaeological record. This should include such topics as climate, vegetation patterns, fauna, geology, topography, soils, etc.

B. Survey Information

1. Complete description of project area including acreage, ground cover, topography, and any other factors which are important to interpreting the survey results.

2. Survey techniques thoroughly described and variations justified.

3. Maps are very important to aid in evaluating reports. At a minimum such maps should indicate position of project area in state/county, within township, location on topography and a detailed map of actual project.

C. Site Information (if present)

1. A full description of the site location, material recovered, and a preliminary interpretation of its place in the local culture history.

2. A completed site form and map must be submitted to the SHPO for each site. Although each contractor may use their own site forms the information included must include at a minimum that requested on the Illinois Archaeological Survey's site form. These site forms are not to be included with the general report (report should include a statement on the confidentiality of this information).

3. Testing procedures used to determine whether the site is significant should be carefully defined and the eligibility of the site for the National Register of Historic Places should be addressed.

D. Recommendations

1. This section must include the archaeologist's recommendations for further testing, possible mitigation impact, or clearance as the case may be. Any suggestions concerning site disposition should be stated in terms of their relationships to relevant regional research questions and the State Archaeological Preservation Plan.

E. Archaeological Survey Short Report (ASSR)

1. If the project is fairly small and few archaeological resources are encountered the contractor may choose to use the SHPO ASSR form to submit their report.

F. Archaeological Contractor's Vita

1. All contract archaeologists working in Illinois must either have a current vita on file with the SHPO or submit one with each report.

G. Project Correspondence

1. Project Correspondence must be included as an appendix. This should included such letters as the initial SHPO survey request, project letters between the contractor and archaeologist, the SHPO review of the draft, and the final SHPO sign-off letter. Please do not include budget information.

Report Submission

At the completion of the archaeological reconnaissance survey a report of the archaeological contractor's findings and recommendations will be prepared. This report must be submitted to the State Historic Preservation Officer for evaluation and approval. The actual submission is the responsibility of the agencies' or firms' project managers.

Address

Illinois Historic Preservation Agency
Preservation Services - Archaeology Section
1 Old State Capitol Plaza
Springfield, IL 62701

Information Contact

Joe Phillippe
Chief Archaeologist
Old State Capitol
217-785-1279 / fax 217-782-8161

Illinois Historic Preservation Office
Guidelines for Archaeological Reconnaissance Surveys/Reports
Addendum

The following is a transcription of a Memorandum issued on Illinois Historic Preservation Agency (IHPA) letter head a as an addendum to the Phase I guidelines. Number 8 deals with Phase II [National Register Eligibility and Significance Testing] guidelines.

MEMORANDUM

TO: Illinois Archaeologists and Archaeological Contractors

FROM: Mark E. Esarey, Chief Archaeologist

DATE: December 18, 1996

RE: SURVEY and REPORTING REQUIREMENTS ADDENDUM (effective all field work after 1 January 1997)

1. Limit the site location data revealed in maps and reports to the specific project boundaries. Site location data is exempt from requests for disclosure under the Freedom of Information Act; this FOIA exemption exists in both state and federal law. In discussing nearby sites in the previous work section of the ASSR form or other report, refer to approximate locations, do not give specific location data for sites outside the project area. You may NOT provide information about sites outside of project areas by written description or by map to anyone.

2. It has come to our attention that several of you have started to do pedestrian field survey at survey intervals higher than 5 meters. This is not acceptable quality field work. For field work conducted after 1 January 1997, any report showing pedestrian survey conducted at greater intervals will be rejected due to inadequate field work. The reject letter will be sent to the hiring agency of firm and copied to you.

In areas of less than 25% surface visibility, you must supplement your pedestrian survey with screened shovel probing in low visibility areas. When surface visibility is less than 40%, you must switch to screened shovel probing on not greater than 15 meter grid intervals.

3. At Phase I, a sketch map (base map) of each site is required in New Site Form or Revisit Form. Show local landmarks.

4. Two copies of all final reports are required to be submitted to the SHPO when the project is completed. One copy will be kept on file at the SHPO while the other will be transferred to Nick Klobuchar who keeps the GIS site file at the ISM Collection Center after documents and log numbers have been assigned to it. Neck uses the second copy and our review letter to update the review status of survey areas and sites in the GIS site file.

5. You are required to report as a site any prehistoric or historic cemetery or burial area containing burials over 100 years old and also not Registered with the Comptrollers office (at Thompson Center, Chicago) under the Cemetery Care Act. You should always state in your reports' recommendation section that vandalism to, disturbance to, or excavation of these cemeteries and/or burials is prohibited by the Human Skeletal Remains Protection Act (20 ILCS 3440).

6. You must include historic maps as part of your ASSR and other reports, including as appropriate county plats, county atlases, city fire insurance maps, GLO maps (especially in the northern 1/3 of the state), etc. In general we want to see the oldest map for the project area that shows structures (or other early historic period sites or early land claim boundaries), and then newer maps as appropriate to show continued presence of, disturbance to, or abandonment of potential sites.

7. Geomorphology. To supplement what is said in the Survey and Report Guidelines about this, you must check for buried deposits on floodplains of ALL major rivers where floodplains are over 1/2 mile wide. You of course do not have to do this in disturbed areas or in naturally low areas such as sloughs, abandoned channels, and wetland, but should document these conditions by map or reference to geological report. Remember to check for loess fall buried sites too, especially in the western counties.

8. Stopping Phase II field work after locating a single cultural feature is not acceptable, your report will be rejected. Phase II should always determine the density and distribution of artifacts and density and distribution of features across the ENTIRE site, as well as occupation age(s) and probable function(s) of site. A site with a total of only a few features may not necessarily be eligible for the National Register. You should always excavate a sample of several features at Phase II, but not any feature that is likely to be a burial. Phase II report recommending NR eligibility MUST state WHAT DATA site is likely to yield.

Mechanical checking for features after gridded surface collection (not greater 10m by 10m units) is almost always acceptable on plowed sites. We recommend stripping about 100 sq. meters in at least 4 spatially separated blocks for sites less than 2000 sq. meters (1/2 acre) in size, 200 sq. meters in not less than 6 spatially separated blocks for sites less that 8000 sq. meters (2 acres), and about 2% of site for larger sites. You should always place one block at either highest density area or location of diagnostics commonly associated with features. Short Testing forms are only acceptable when a site is recommended as not eligible. Sketch maps are not acceptable as site base maps Phase II or Phase III.

9. Photographs of buildings should be full frame and must be cross referenced to map data accompanying ASSR or other report. No Photocopies of Photos in original copy to SHPO. Any building eligibility evaluations must be done by persons meeting 36 CFR part 51, Appendix A as a Historian or Architectural Historian.

Information for Developers and Agencies about General Procedures for Phase II Archaeological Projects

Anyone notified of an archaeological site subject to Phase 2 testing in their project area, has several options:

1. Preserve the site by planning your project to avoid or green space the site, a deed covenant may be necessary depending on the landownership and the law the project is being reviewed under.

2. Hire an archaeological firm to conduct a Phase 2 project on the site.

3. Choose a different location for the project (generally means starting review process over from scratch, but there will be rare occasion when this is actually the fastest and cheapest option). This is something you may wish to consider if there are burials in the project area, or an extremely large or dense site in the project area.

Phase 2 archaeological projects consist of fieldwork, analysis, and report by the archaeological firm, and then review of the report by the IHPA and sometimes also by the funding or permitting agency, with additional work required part of the time depending on the significance of the site(s). However, if a project has no significant sites after a Phase 2 project has been completed and reviewed, then the archaeological is completed as soon as HPA accepts the report. If a project area has more than 1 site, each one is reviewed independently. In other words, one could be determined not significant and while another one is determined significant or potentially significant.

Phase 2 fieldwork generally consists of obtaining good artifact type and location data from the site surface by methods such as grid collections, piece plotting, etc. A small-scale excavation follows this step. In some cases the fieldwork (commonly called test units) can be done with assistance of machines like backhoes or occasionally even larger equipment such as belly scrapers (plowed or partially disturbed sites), but sometimes it is necessary to dig by hand (mounds, unplowed sites, or inaccessible locations). The test units are excavated to the base of the plowzone or topsoil, and then the base of the unit is checked for the presence of archeological features (foundations, pits, hearths, burials, middens, etc.). If features are present, a small number (generally not more than 5-10) of them are excavated to provide information about the site's age, function, integrity, etc. Samples of soil from each feature for botanical and zoological analysis are usually taken. Also on floodplains of large rivers, several additional "deep" trenches are usually necessary to check for buried sites. The amount of time required for fieldwork is highly dependent on the size of a site, on whether machines can be used, and on the density of features, as well as the weather.

Analysis of Phase 2 consists of identifying and inventorying all of the artifacts recovered and preparing data recorded in the field for a report. The length of time needed is again highly variable based on factors listed above. The report describes the field and lab information, provides a preliminary interpretation of the site, and makes recommendations concerning the significance of the site.

The archaeology staff at the State Historic Preservation Office (IHPA in Illinois) and sometimes the archaeologists at the lead funding or permitting agency review the report. Based on the report and their knowledge of regional archaeology, they determine (following criteria outlined in the appropriate law and regulations for each projects) if the work done was acceptable, and whether the site(s) are not significant and need no further investigation or are significant. If a site is significant (meets the eligibility criteria for the National Register of Historic Places), the choices are mitigation (generally by complete excavation) or preservation.

Mark E. Esarey, Ph.D., Chief Archaeologist (1-21-98)

APPENDIX C
FLOW CHARTS

The following workflow diagrams represent the responsibilities of the Signatories to this Agreement in the following situations. References to the applicable authorities, including this Agreement, are noted.

I. Declarations

II. Expedited Emergency Reviews

III. Dispute Resolution for Expedited Emergency Reviews

IV. Disaster Recovery Reviews

V. Changes to Scope of Work

I. DECLARATIONS

Authorities			FEMA	SHPO	OTHER
44 CFR	36 CFR	PA			
					Presidential Declaration w/ PA Funds
206.5		IV.A.2	Consult with other involved Federal Agencies regarding compliance		
		IV.B.1		Provide FEMA list of properties of concern	
	800.10(c)	IV.A.4	Notify NPS if National Historic landmarks are affected		
		IV.A.1	Identify properties that may not have retained integrity		
		III.D.3, XI, XII		Provide staff for on-site archaeological assessments	
		IV.B.2		Provide FEMA list of SHPO staff and consultants	
	800.3(f)	IV.B.3		Assist FEMA in identifying consulting parties	
		IV.B.4		Assist local jurisdictions in identifying staging and landfill sites	
		IV.A.1	Concur regarding properties not retaining integrity.		
	800.3(e)	IV.A.4	Develop a feasible plan for public involvement		

II. Emergency Reviews

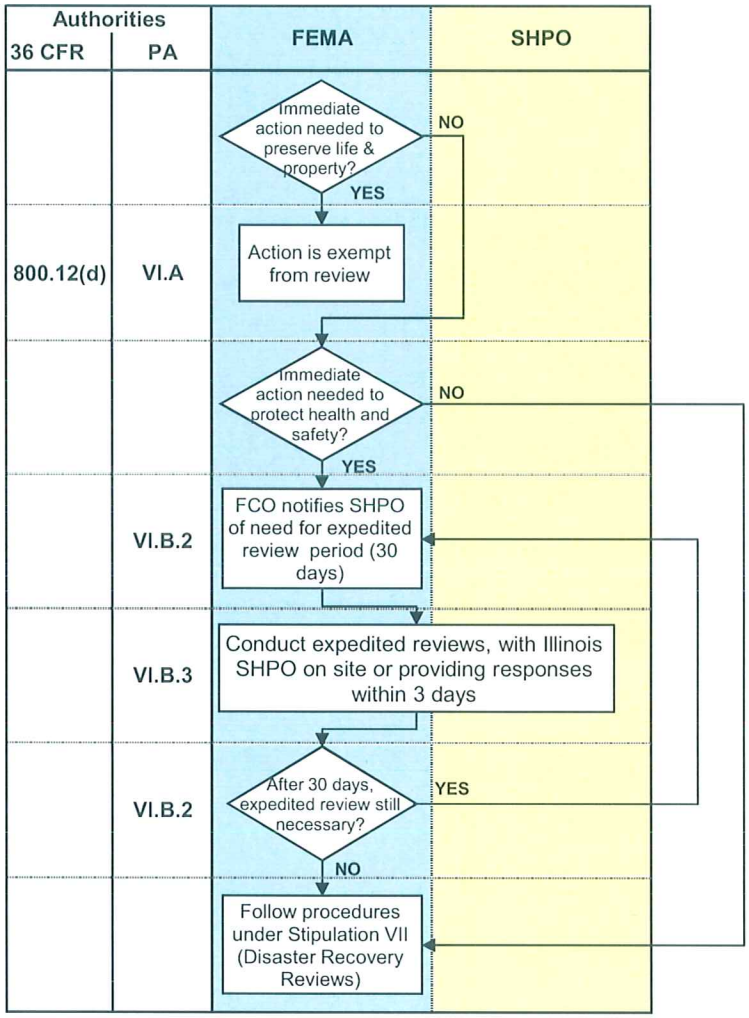

III. Dispute Resolution for Emergency Reviews

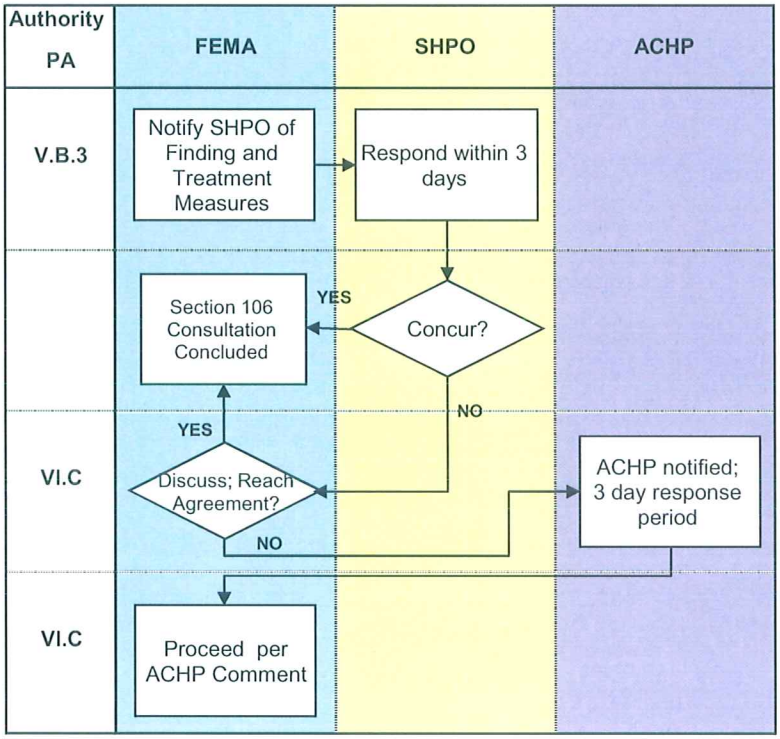

IV. Disaster Recovery Reviews

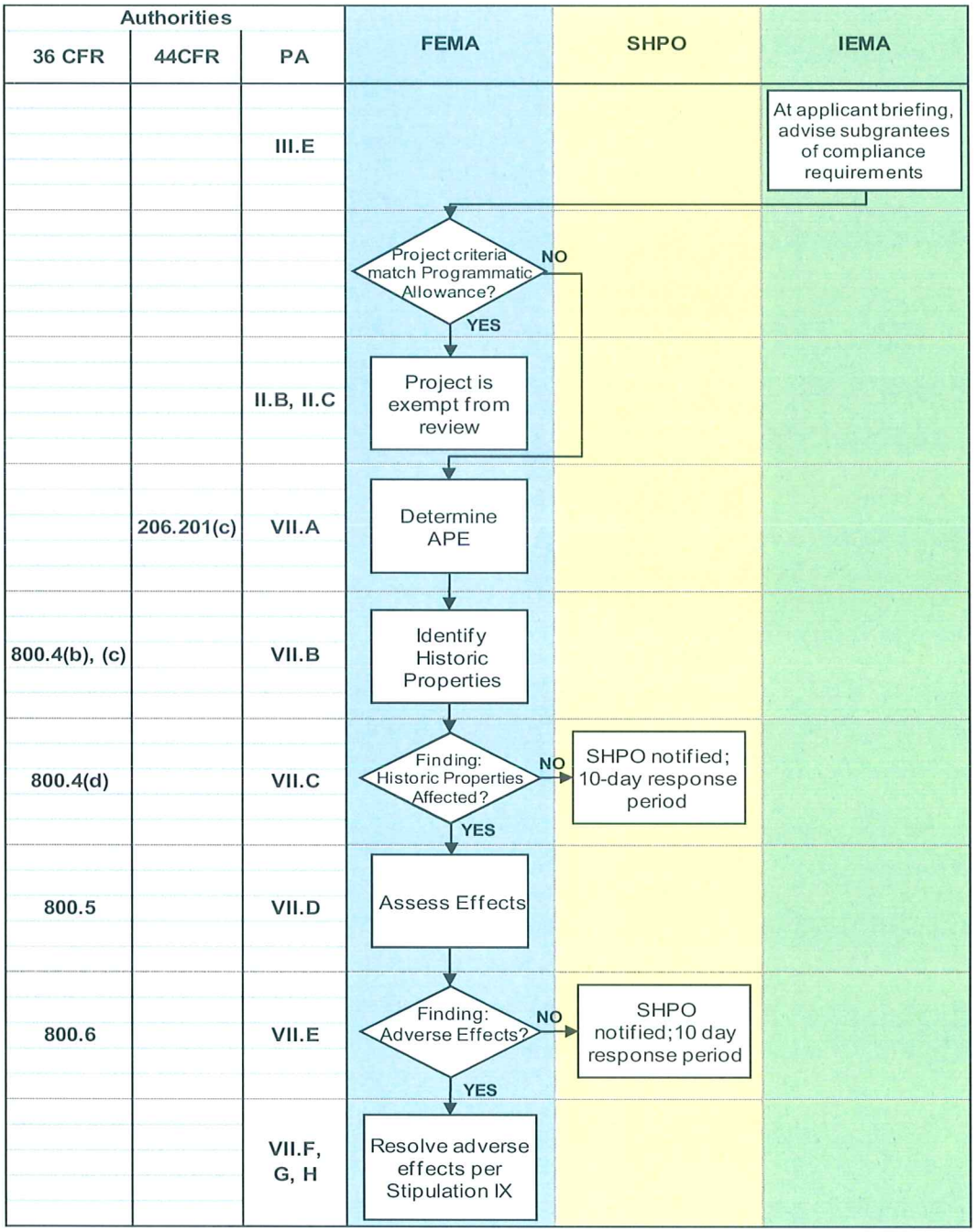
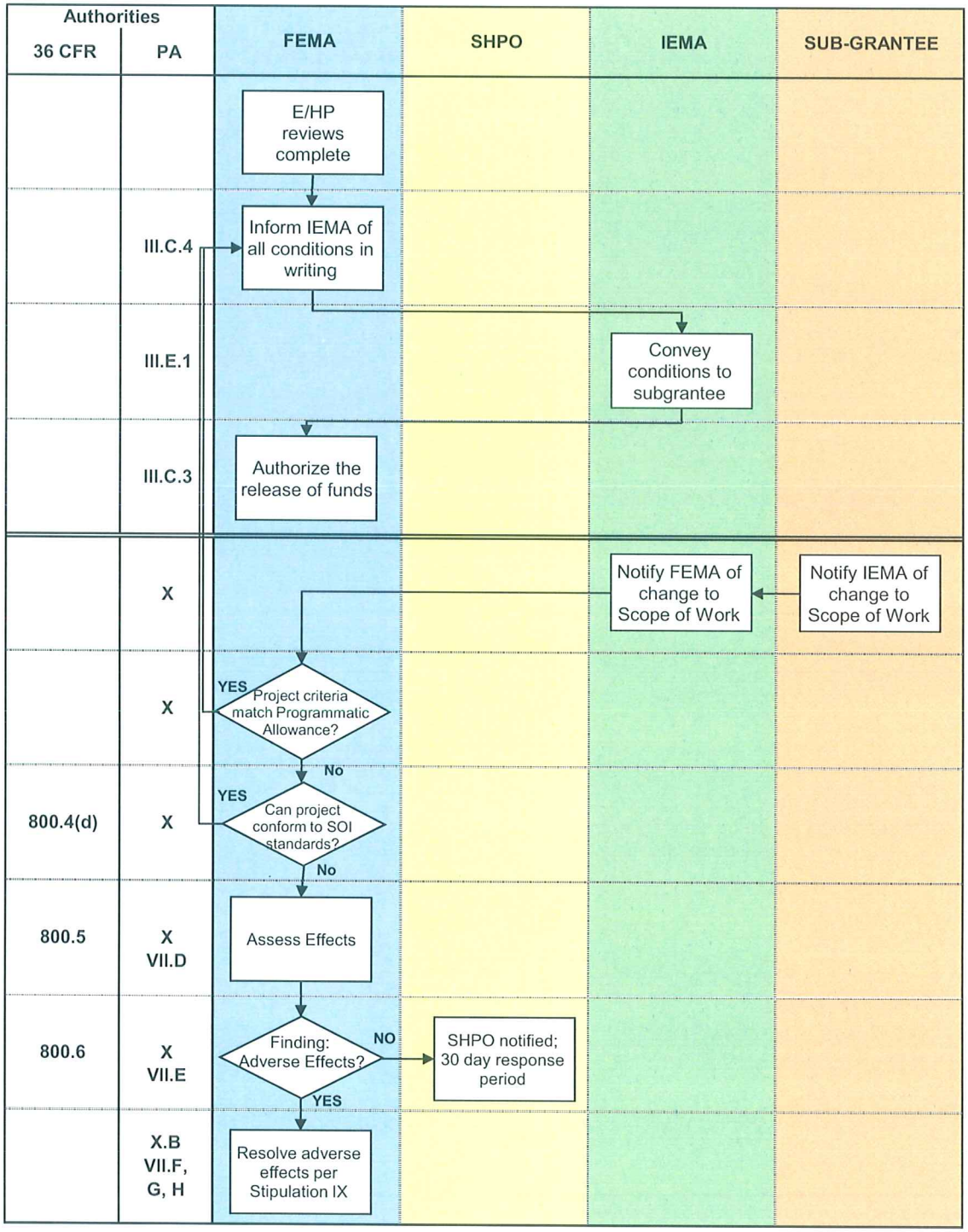
V. Changes to Scope of Work